MICRO-EPSILON

More Precision

colorSENSOR // True Color Measuring Systems

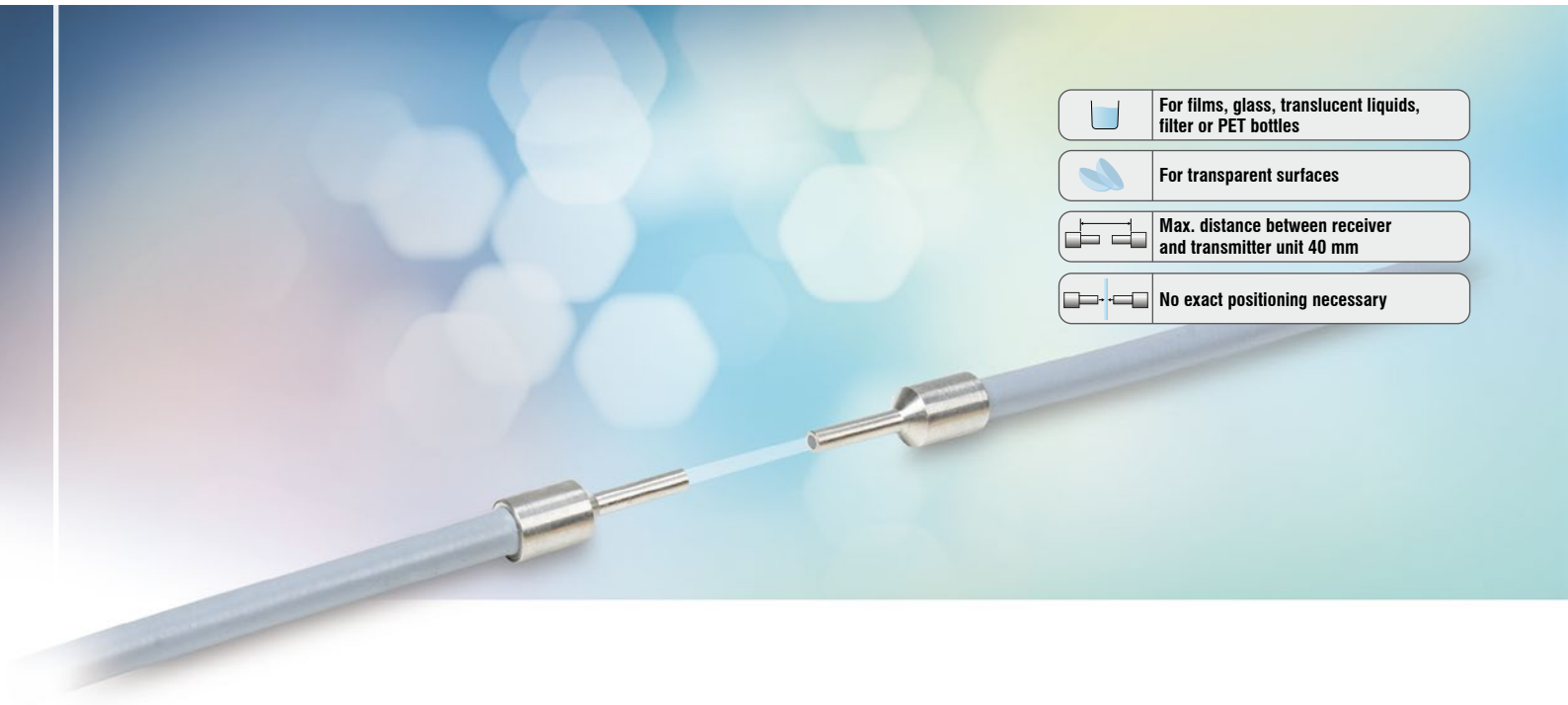

With the transmission sensor, the light emitted by the controller is sent from one side (backlight) at an angle of 180° (parallel) to the surface of the object to be tested. The transmitted light component (material color) of the sample is detected by the sensor from the opposite side at 0° (parallel) to the surface and transmitted to the controller via an optical fiber. Backlighting also makes it possible to measure in relative terms the colors of liquids in a glass tube or glass body, such as apple juice or detergent, with a repeatability of $\Delta E \leq 0.3$. The sensors are available with different ranges (distance between transmitter and receiver) and different spot sizes. Other working distances, sheaths and cable lengths are optionally available.

The transmission sensor enables the measurement of transparent and semi-transparent products such as filters, films and optical lenses. The measurement arrangement in transmitted light 180°:0°, combined with the performance of the CFO series, provides even more precision. Here, the fluctuating distance between the test object and the receiver or illumination has no noticeable influence on the measurement result. The transmission sensor can be universally used but is also suitable for special solutions (customer-specific adaptions). Due to the standard FA connection, the optical fiber is also compatible with other controllers (previous series such as LT or WLCS). The transmission sensor offers many advantages in terms of performance and installation possibilities. Due to the external controller, less installation space is required at the measuring point.

Measurement geometry

Transmission sensor 0°:180°

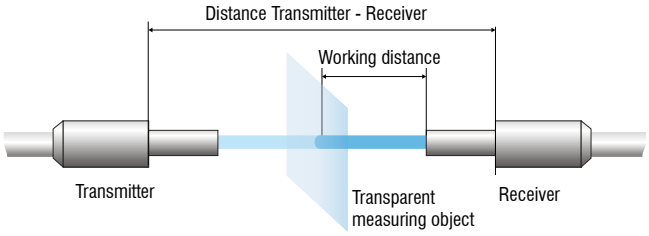

Transmission sensor with transmitter and receiver

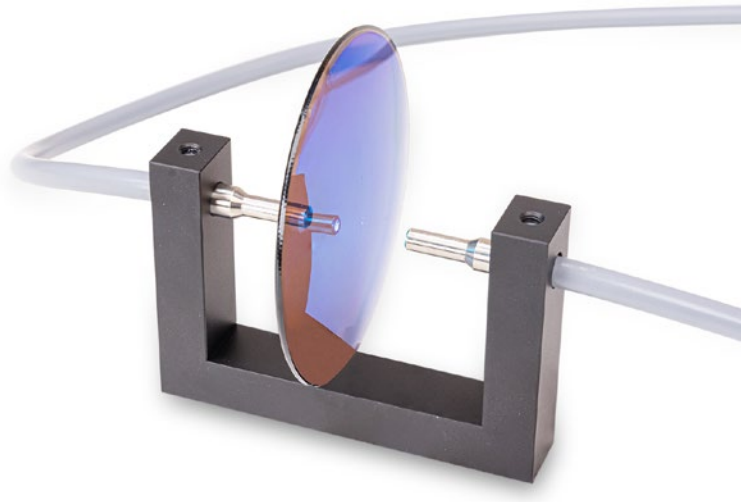

CFS3 transmission sensors are used for color measurements of (semi-)transparent measuring objects such as glass, liquids and plastics.

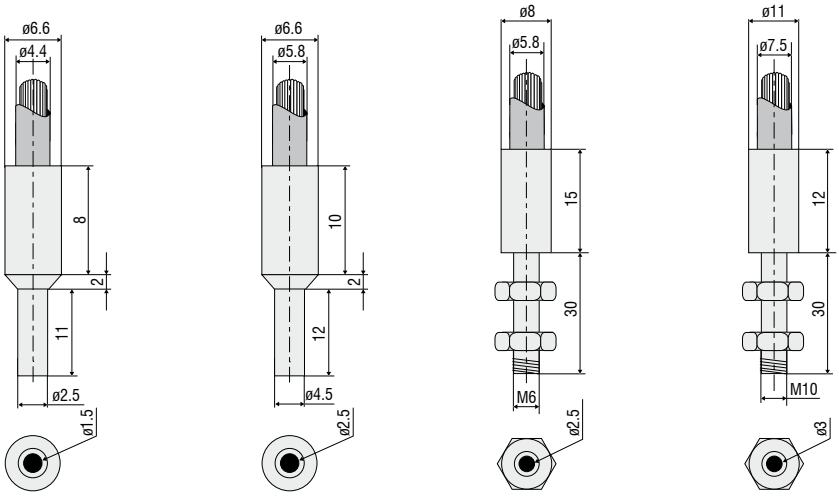

Model		CFS3-A11	CFS3-A20	CFS3-C20	CFS3-C30
Part number		10810518	10810490	10810910	10811921
Type of sensor		Transmission sensor			
Working distance [1]	Start	5 mm	5 mm	5 mm	5 mm
	Optimal	10 mm	10 mm	10 mm	10 mm
	End	15 mm	20 mm	20 mm	20 mm
Measurement spot diameter [1]	Start Optimal End	1.5 mm	2.5 mm	2.5 mm	3.0 mm
Light spot diameter [1]	Start	10 mm	12 mm	12 mm	16 mm
	Optimal	16 mm	20 mm	20 mm	20 mm
	End	24 mm	32 mm	32 mm	38 mm
Working distance Transmitter and receiver	Start	10 mm	10 mm	10 mm	10 mm
	Optimal	20 mm	20 mm	20 mm	20 mm
	End	30 mm	40 mm	40 mm	40 mm
Measurement geometry [2]		0°:180°			
Min. target size (flat)		Ø 1.5 mm	Ø 2.5 mm		Ø 3.0 mm
Minimum curvature radius of target (curved)		15 mm	25 mm		30 mm
Sensitivity	Distance [1) 3)]	< 0.3 ΔE / mm			
	Tilt angle [1) 3)]	< 0.3 ΔE / °			
	Ambient light [1) 3)]	< 0.3 ΔE / 1,000 lx			
Permissible ambient light [1) 3)]		< 40,000 lx			
Max. tilt angle [1) 3)]		±30°			
Connection		integrated fiber-optic cable (axial) with metal-silicone (T) sheath, standard length 1.2 m; other lengths 0.3 m ... 2.4 m optionally available			
Mounting		FA (M18x1)			
Temperature range	Storage / operation	Sensor head: -10 °C … +80 °C; cable: -60 °C … +180 °C			
Humidity		20 … 80 % r.H. (non-condensing)			
Protection class (DIN EN 60529)		IP64			
Material		Stainless steel, glass fiber bundle with metal-silicone sheath (T)			
Weight		90 g	160 g	190 g	280 g
Compatibility		CFO controller (LT, WLCS, FES)			
Features		All variants are also available with different cable sheath, length 0.3 ... 4 m, vibration protection, IP protection, suitable for drag chains and for temperature ranges up to 2,000 °C. In combination with a pressure-tight feed-through, a stainless steel sheath and T250° bonding, vacuum applications down to 10-5 mbar are also possible.			

The specified data apply to transparent LEE filter 130 Clear (Y=95%)

[1] In combination with colorSENSOR CFO200 and a repeatability of ΔE ≤0.3

[2] Can also be used for indirect gloss measurement in angular arrangement 60°:60° (total reflection).

[3] Valid for optimal working distance

Sensors and Systems from Micro-Epsilon

Sensors and systems for displacement, distance and position

Sensors and measurement devices for non-contact temperature measurement

Measuring and inspection systems for metal strips, plastics and rubber

Optical micrometers and fiber optics, measuring and test amplifiers

Color recognition sensors, LED analyzers and inline color spectrometers

3D measurement technology for dimensional testing and surface inspection

Modifications reserved / Y9761371-G07/2024GKE

MICRO-EPSILON

MICRO-EPSILON Eltrotec GmbH
Manfred-Wörner-Straße 101 · 73037 Göppingen / Germany
Tel. +49 (0)7161 98872-300 · Fax+49 (0)7161 98872-303
eltrotec@micro-epsilon.de · **www.micro-epsilon.com**