MICRO-EPSILON

More Precision

colorSENSOR // True Color Measuring Systems

Reflex sensor for the distinction of materials and parts

colorSENSOR CFS4

With the reflex sensor, the light emitted by the controller is sent at 0° (parallel) to the surface of the part to be tested. Both diffuse and directly reflected portions are present in the back reflex (surface color + surface gloss). The reflected light components of the sample are also detected by the sensor at 0° (parallel) to the surface and transmitted to the controller via an optical fiber. The sensors are available for different working distances and spot sizes. Other versions in other lengths or temperature ranges are optionally available.

The reflex sensor, combined with the performance of the CFO series, provides even more precise differentiation of the surface characteristics of materials. The measurement arrangement in the reflex sensor of transmitter and receiver in 0°:0° allows a quality control not only by color but also in combination with the reflection properties of the surfaces of the product. This is needed, for example, when sorting different materials such as stainless steel, steel, tin, zinc, aluminum, brass, gold or other colored parts.

Due to the standard FA connection, the optical fiber is also compatible with other controllers (previous series such as LT or WLCS). The reflex sensor offers many advantages in terms of performance and installation possibilities. Due to the external controller, less installation space is required at the measuring point.

Measurement geometry
Reflex sensor 0°:0°

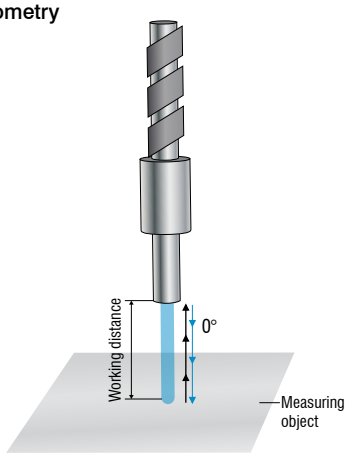

The CFS4 sensors are suitable for color measurements of numerous surfaces such as plastics or metal.

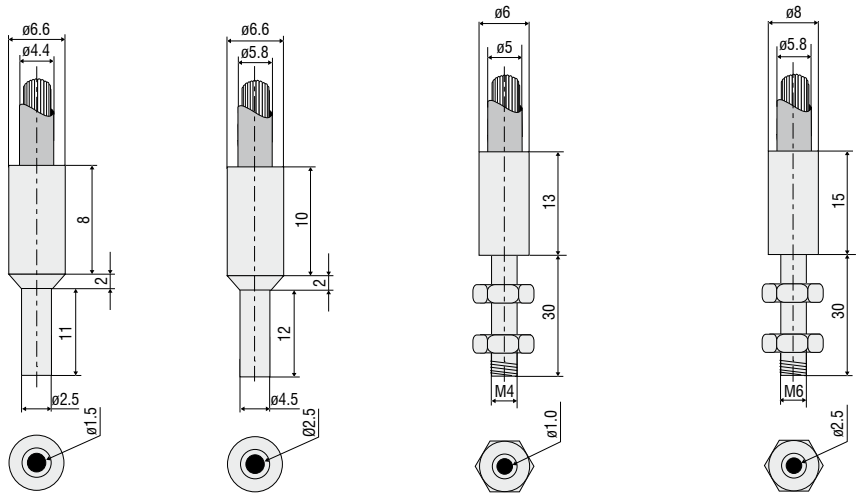

Model		CFS4-A11	CFS4-A20	CFS4-C10	CFS4-C20
Part number		10810487	10810351	10810383	10810568
Type of sensor		Reflex sensor			
Working distance [1]	Start	5 mm	5 mm	5 mm	5 mm
	Optimal	5 mm	5 mm	5 mm	5 mm
	End	15 mm	20 mm	15 mm	20 mm
Measurement spot diameter [1]	Start	8 mm	10 mm	8 mm	10 mm
	Optimal	8 mm	10 mm	8 mm	10 mm
	End	22 mm	28 mm	20 mm	28 mm
Light spot diameter [1]	Start	10 mm	12 mm	8 mm	12 mm
	Optimal	10 mm	12 mm	8 mm	12 mm
	End	24 mm	30 mm	26 mm	30 mm
Repeatability in rotation [1) 2) 4)]		ΔE ≤ 1.2	ΔE ≤ 0.6	ΔE ≤ 1.8	ΔE ≤ 0.6
Measurement geometry		0°:0°			
Min. target size (flat)		Ø 8 mm	Ø 10 mm	Ø 8 mm	Ø 10 mm
Minimum curvature radius of target (curved)		80 mm	100 mm	80 mm	100 mm
Sensitivity	Distance [1) 4)]	< 13.3 ΔE / mm	< 10.4 ΔE / mm	< 13.0 ΔE / mm	< 10.4 ΔE / mm
	Tilt angle [1) 4)]	< 0.3 ΔE / °			
	Ambient light [1) 4)]	< 0.3 ΔE / 1,000 lx			
Permissible ambient light [1) 4)]		< 40,000 lx		< 16,000 lx	< 40,000 lx
Max. tilt angle [1) 4)]		±45°			
Connection		integrated fiber-optic cable (axial) with metal-silicone (T) sheath, standard length 1.2 m; other lengths 0.3 m ... 2.4 m optionally available		integrated fiber-optic cable (axial) with metal (M) sheath, standard length 1.2 m; other lengths 0.3 m ... 2.4 m optionally available	integrated fiber-optic cable (axial) with metal-silicone (T) sheath, standard length 1.2 m; other lengths 0.3 m ... 2.4 m optionally available
Mounting		FA (M18x1)			
Temperature range	Storage / operation	Sensor head: -10 … +80 °C; Cable: -60 … +180 °C		Sensor head: -10 … +80 °C Cable: -40 … +300 °C	Sensor head: -10 … +80 °C Cable: -60 … +180 °C
Humidity		20 … 80 % r.H. (non-condensing)		20 … 60 % r.H. (non-condensing)	20 … 80 % r.H. (non-condensing)
Protection class (DIN EN 60529)		IP64		IP40	IP64
Material		Stainless steel, glass fiber bundle with metal-silicone sheath (T)		Stainless steel, glass fiber bundle with metal sheath (M)	Stainless steel, glass fiber bundle with metal-silicone sheath (T)
Weight		50 g	90 g	60 g	100 g
Compatibility		CFO controller (LT, WLCS, FES)			
Features		All variants are also available with different cable sheath, length 0.3 ... 2.4 m, vibration protection, IP protection, suitable for drag chains and for temperature ranges up to 2,000 °C. In combination with a pressure-tight feed-through, a stainless steel sheath and T250° bonding, vacuum applications down to 10-5 mbar are also possible.			

The specified data apply to a white, diffuse reflecting surface (zenith white reference)
[1] In combination with colorSENSOR CFO200 and a repeatability of ΔE ≤0.3
[2] On titanium pearl mica from a distance of 30 mm
[3] With potted connection cable also available with IP67
[4] Valid for optimal working distance
[5] Only possible in combination with external illumination

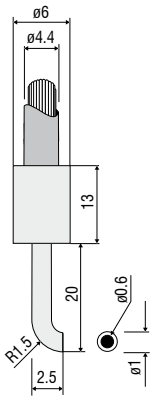

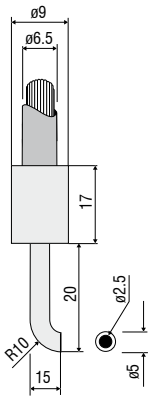

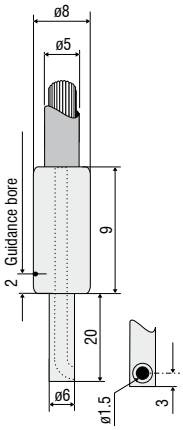

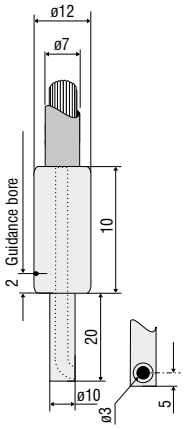

Model		CFS4-D11/90	CFS4-D30/90	CFS4-F10/90	CFS4-F30/90
Part number		10810575	10810699	10810427	10811491
Type of sensor		Reflex sensor			
Working distance [1]	Start	5 mm	5 mm	5 mm	5 mm
	Optimal	5 mm	5 mm	5 mm	5 mm
	End	15 mm	20 mm	15 mm	20 mm
Measurement spot diameter [1]	Start	8 mm	10 mm	8 mm	10 mm
	Optimal	8 mm	10 mm	8 mm	10 mm
	End	22 mm	28 mm	20 mm	28 mm
Light spot diameter [1]	Start	10 mm	12 mm	8 mm	12 mm
	Optimal	10 mm	12 mm	8 mm	12 mm
	End	24 mm	30 mm	26 mm	30 mm
Repeatability in rotation [1) 2) 4)]		ΔE ≤ 0.9	ΔE ≤ 0.6	ΔE ≤ 1.8	ΔE ≤ 0.4
Measurement geometry		0°:0°			
Min. target size (flat)		Ø 8 mm	Ø 10 mm	Ø 8 mm	Ø 10 mm
Minimum curvature radius of target (curved)		80 mm	100 mm	80 mm	100 mm
Sensitivity	Distance [1) 4)]	< 13.3 ΔE / mm	< 10.4 ΔE / mm	< 13.0 ΔE / mm	< 10.4 ΔE / mm
	Tilt angle [1) 4)]	< 0.3 ΔE / °			
	Ambient light [1) 4)]	< 0.3 ΔE / 1,000 lx			
Permissible ambient light [1) 4)]		< 40,000 lx			
Max. tilt angle [1) 4)]		±45°			±30°
Connection		integrated fiber-optic cable (axial) with metal-silicone (T) sheath, standard length 1.2 m; other lengths 0.3 ... 2.4 m optionally available		integrated fiber-optic cable (axial) with metal (M) sheath, standard length 1.2 m; other lengths 0.3 ... 2.4 m optionally available	
Mounting		FA (M18x1)			
Temperature range	Storage / operation	Sensor head: -10 … +80 °C; Cable: -60 … +180 °C		Sensor head: -10 … +80 °C; Cable: -40 … +300 °C	
Humidity		20 … 80 % r.H. (non-condensing)		20 … 60 % r.H. (non-condensing)	
Protection class (DIN EN 60529)		IP64		IP40	
Material		Stainless steel, glass fiber bundle with metal-silicone sheath (T)		Stainless steel, glass fiber bundle with metal sheath (M)	
Weight		70 g	110 g	60 g	100 g
Compatibility		CFO controller (LT, WLCS, FES)			
Features		All variants are also available with different cable sheath, length: 0.3 ... 2.4 m, vibration protection, IP protection, suitable for drag chains and available for temperature ranges up to 2,000 °C. In combination with a pressure-tight feed-through, a stainless steel sheath and T250° bonding, vacuum applications down to 10^{-5} mbar are also possible.			

The specified data apply to a white, diffuse reflecting surface (zenith white reference)
[1] In combination with colorSENSOR CFO200 and a repeatability of ΔE ≤0.3
[2] On titanium pearl mica from a distance of 30 mm
[3] With potted connection cable also available with IP67
[4] Valid for optimal working distance
[5] Only possible in combination with external illumination

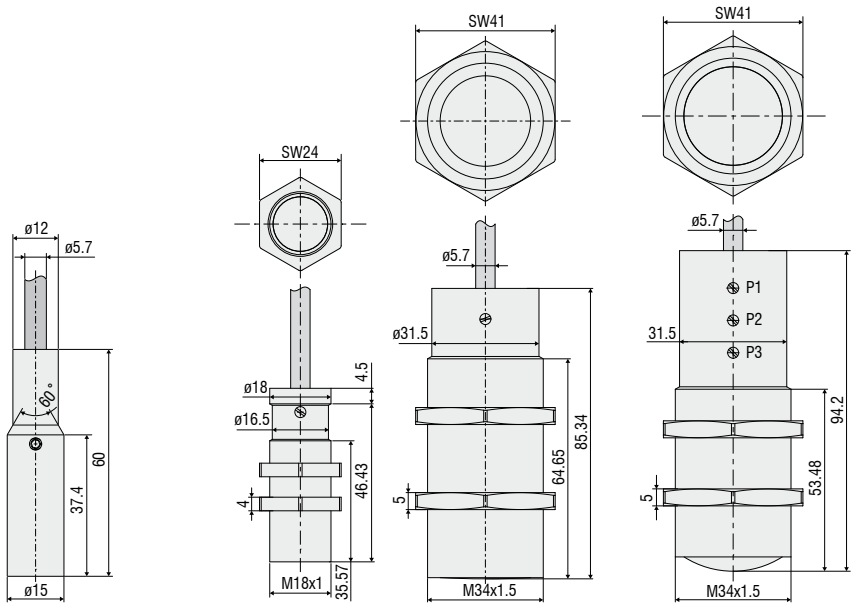

Model		CFS4-J03-0,8	CFS4-J04	CFS4-J03	CFS4-K18	CFS4-K34	CFS4-K34-XL		
Part number		10824987	10824988	10824989	10824990	10824991	10824992		
Type of sensor		Reflex sensor							
							P1	P2	P3
Working distance [1]	Start	8 mm	9 mm	7 mm	7 mm	25 mm	70 mm	80 mm	90 mm
	Optimal	10 mm	11 mm	10 mm	25 mm	170 mm	110 mm	140 mm	200 mm
	End	11 mm	13 mm	14 mm	55 mm	270 mm	150 mm	260 mm	320 mm
Measurement spot diameter [1]	Start	2 mm	1.5 mm	5 mm	9 mm	21 mm	11 mm	16 mm	26 mm
	Optimal	0.8 mm	2 mm	2 mm	6 mm	17 mm	7 mm	8 mm	22 mm
	End	1.5 mm	4 mm	6 mm	12 mm	21 mm	17 mm	26 mm	22 mm
Light spot diameter [1]	Start	2 mm	1.5 mm	5 mm	9 mm	22 mm	12 mm	20 mm	28 mm
	Optimal	0.8 mm	2 mm	3 mm	7 mm	18 mm	7 mm	13 mm	28 mm
	End	2 mm	3 mm	6 mm	24 mm	23 mm	18 mm	28 mm	30 mm
Repeatability in rotation [1) 2) 4)]		ΔE ≤ 13.5	ΔE ≤ 34.0	ΔE ≤ 4.3	ΔE ≤ 1.5	ΔE ≤ 1.2	ΔE ≤ 2.0	ΔE ≤ 1.2	ΔE ≤ 3.5
Measurement geometry		0°:0°							
Min. target size (flat)		Ø 1 mm	Ø 1.5 mm	Ø 2 mm	Ø 6 mm	Ø 17 mm	Ø 7 mm	Ø 8 mm	Ø 22 mm
Minimum curvature radius of target (curved)		10 mm	15 mm	20 mm	60 mm	170 mm	70 mm	80 mm	22 mm
Sensitivity	Distance [1) 4)]	< 33 ΔE / mm	< 18 ΔE / mm	< 11 ΔE / mm	< 2 ΔE / mm	< 0.3 ΔE / mm	< 3 ΔE / mm	< 0.7 ΔE / mm	< 0.3 ΔE / mm
	Tilt angle [1) 4)]	< 0.6 ΔE / °	< 0.4 ΔE / °	< 0.3 ΔE / °					
	Ambient light [1) 4)]	< 0.3 ΔE / 1,000 lx							
Permissible ambient light [1) 4)]		< 40,000 lx				< 4,800 lx	< 30,000 lx	< 10,000 lx	< 4,500 lx
Max. tilt angle [1) 4)]		±45°							
Connection		integrated fiber optic cable axial with metal-silicone (T) sheath, standard length 1.2 m; other lengths 0.3 ... 2.4 m optionally available							
Mounting		FA (M18x1)							
Temperature range	Storage / operation	Sensor head: -10 °C … +80 °C; cable: -60 °C … +180 °C							
Humidity		20 … 60 % r.H. (non-condensing)							
Protection class (DIN EN 60529)		IP54 [3)]							
Material		Aluminum black anodized, glass, glass fiber bundle with metal-silicone coating (T)							
Weight		103 g	110 g	117 g	128 g	290 g	290 g		
Compatibility		CFO controller (LT, WLCS, FES)							
Features		All cable variants are also available with different cable sheath, length: 0.3 ... 2.4 m, vibration protection, IP protection and suitable for drag chains.							

The specified data apply to a white, diffuse reflecting surface (zenith white reference)

[1)] In combination with colorSENSOR CFO200 and a repeatability of ΔE ≤0.3

[2)] On titanium pearl mica from a distance of 30 mm

[3)] With potted connection cable also available with IP67

[4)] Valid for optimal working distance

[5)] Only possible in combination with external illumination

Sensors and Systems from Micro-Epsilon

Sensors and systems for displacement, distance and position

Sensors and measurement devices for non-contact temperature measurement

Measuring and inspection systems for metal strips, plastics and rubber

Optical micrometers and fiber optics, measuring and test amplifiers

Color recognition sensors, LED analyzers and inline color spectrometers

3D measurement technology for dimensional testing and surface inspection

Modifications reserved / Y9761371-G07/2024GKE

MICRO-EPSILON

MICRO-EPSILON Eltrotec GmbH
Manfred-Wörner-Straße 101 · 73037 Göppingen / Germany
Tel. +49 (0)7161 98872-300 · Fax+49 (0)7161 98872-303
eltrotec@micro-epsilon.de · **www.micro-epsilon.com**