MICRO-EPSILON

More Precision.

optoNCDT ILR // Laser-optical distance sensors

High-performance laser distance sensor for industrial applications
optoNCDT ILR2250-100

- Large measuring range up to 100 m (150 m with reflector)
- Ideal for OEM serial integration
- Laser class 2
- Highest signal stability on numerous surfaces
- Compact & lightweight design
- INTERFACE Analog / USB / RS422 / PROFINET / EtherNet/IP / IO-Link
- Now also with integrated heating for outdoor applications

With the optoNCDT ILR2250-100, Micro-Epsilon presents a new powerful laser distance sensor. The sensor is designed for operation with or without reflector film, which is used depending on the distance and ambient conditions. The sensor measures large distances up to 100 m without contact and provides best results even on challenging (dark, structured or weakly reflecting) surfaces. The measuring range can be extended up to 150 m by attaching a reflector film to the measuring object.

Thanks to the integrated AUTO measurement mode, precise and reliable measurements can be made even on dark, partially reflecting and distant targets. A simple and fast alignment of the sensor is made possible by the integrated mounting plate with 4 set screws.

The ILR2250-100 laser distance sensors provide reliable results even under harsh conditions. They are protected against dust and splashes of water thanks to the robust design in an IP65 certified die-cast aluminum housing. Compact size combined with low weight opens up new fields of application particularly in factory and plant automation, as well as in drone applications for distance measurement from the air.

New: ILR2250-100-IO with IO-Link

The ILR2250-100-IO model is equipped with an IO-Link interface. The IO-Link communication standard simplifies data communication while reducing the commissioning time of the sensor.

New: ILR2250-100-H with integrated heating

The ILR2250-100-H option has an integrated heating and cooling element that enables operation in the temperature range of -40 °C to +65 °C. This allows the sensors to be used permanently outdoors.

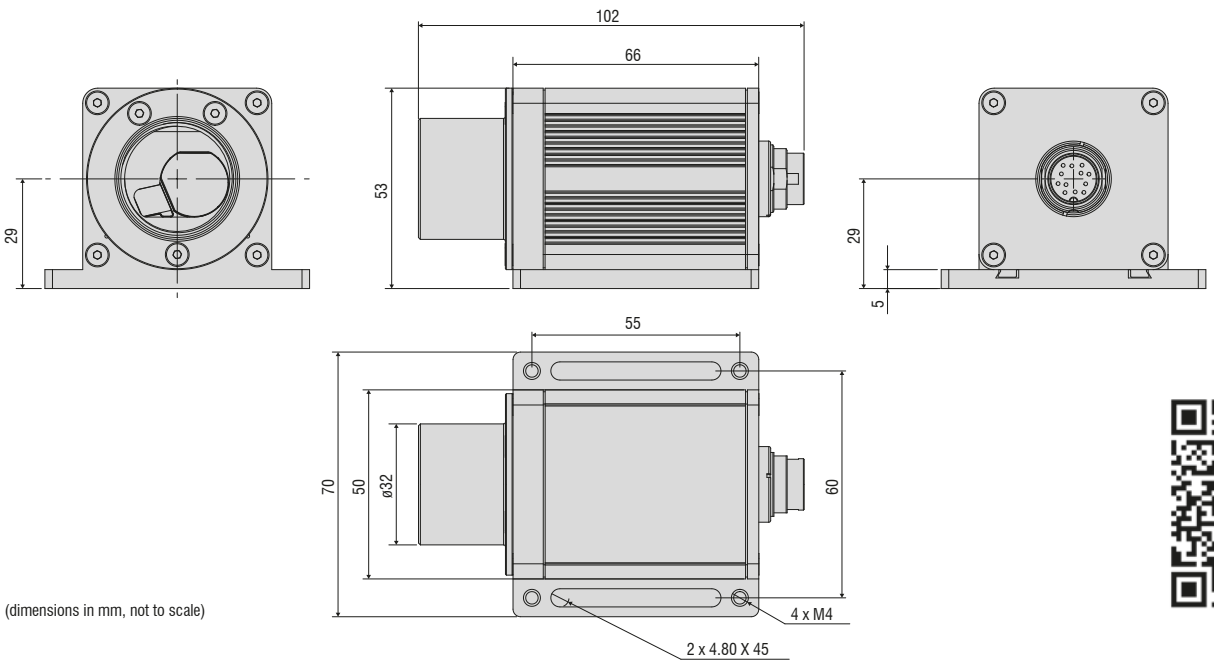

(dimensions in mm, not to scale)

Model		ILR2250-100	ILR2250-100-H	ILR2250-100-IO
Article number		7112015	7112015.200	7112016
Measuring range [1]		SMR		EMR
	black 6 %	0.05 m		30 m
	gray 40 %	0.05 m		70 m
	white 80 %	0.05 m		100 m
	Reflector film [2]	35 m		150 m
Measuring rate		20 Hz		
Resolution		0.1 mm		
Linearity		< ±1 mm [3]		
Repeatability [4]		< 300 µm		
Temperature compensation		-10 … +50 °C	-40 … +65 °C	-10 … +50 °C
Light source		Semiconductor laser < 1 mW, 655 nm (red)		
Typ. service life		50,000 h		
Laser class		Class 2 in accordance with DIN EN 60825-1: 2015-07		
Permissible ambient light		50,000 lx		
Supply voltage		10 … 30 VDC	24 … 30 VDC	10 … 30 VDC
Power consumption		< 1.5 W (24 V)	< 10 W (24 V)	< 1.5 W (24 V)
Signal input		Trigger		-
Digital interface		RS422 / USB [5] / PROFINET [5] / EtherNet/IP [5]		IO-Link 1.1; process data, parameter set up and diagnostics
Analog output		4 ... 20 mA (16 bit, freely scalable within the measuring range)		-
Switching output		Q1 / Q2 / Q3 (configurable)		Q1 / Q2 / Q3 (configurable) included in IO-Link process data
Connector		Supply/signal: 12-pin M16 screw/plug connection (see accessories for connection cable)		Supply/signal: 5-pin M12 screw/plug connection (see accessories for connection cable)
Assembly		Screwing and adjustment on sensor base plate		
Temperature range	Storage	-25 … +70 °C (non-condensing)		
	Operation	-10 … +50 °C (non-condensing)	-40 … +65 °C (non-condensing)	-10 … +50 °C (non-condensing)
Shock (DIN EN 60068-2-29)		15 g / 6 ms in 3 axes, in 3 directions, 1000 shocks each		
Vibration (DIN EN 60068-2-6)		15 g / 10 … 500 Hz in 3 axes, 10 cycles each		
Protection class (DIN EN 60529)		IP65		
Material		Aluminum housing		
Weight		approx. 265 g	approx. 270 g	approx. 265 g
Control and indicator elements		5x LEDs for power, signal strength and switching outputs	5x LEDs for power, signal strength, heating and switching outputs	5x LEDs for power, signal strength and switching outputs
Special features		4 measurement-specific operating modes via sensorTOOL		4 measurement-specific operating modes via IO-Link

SMR = Start of measuring range, EMR = End of measuring range
The specified data apply for a consistent room temperature of 20 °C, sensor is continuously in operation. Measured on white, diffuse reflecting surface (reference ceramic)
[1] Depends on the reflectivity of the target, ambient light interference and atmospheric conditions
[2] ILR-RF210 reflector film 210 x 297 mm; article no: 7966058
[3] Measured in the range of 0.05 … 20 m; statistical spread 2 σ
[4] Measurement frequency of 20 Hz, moving average 10
[5] Connection via interface module (see accessories)

Oval spot diameter ILR2250-100

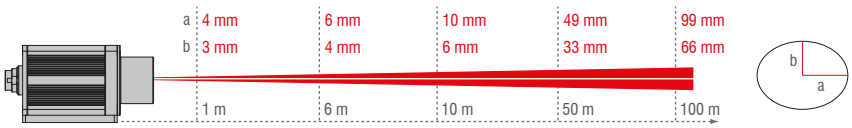

The ILR2250 sensor works with a semiconductor laser at a wavelength of 655 nm (visible/red). Laser power is <1 mW.
The sensors fall within laser class 2. Devices of this laser class require no special safety precautions.

EtherNet/IP
PROFINET
Analog
RS422
IO-Link inside

Accessories
optoNCDT ILR

Accessories optoNCDT ILR103x/LC1

Connection	Interface modules	Connection cables	Sensor	Accessories
Supply/PLC Power supply unit PS2031 Art. no.: 2420096		Supply and output cable Art. no.: 2901232 (2 m) 2901233 (2 m, 90°) 2901234 (5 m) 2901235 (5 m, 90°) 2901268 (10 m, 90°) 29011248 (10 m)		Reflector 250 x 250 mm Art. no.: 7966001
Digital output/Ethernet	IF1032/ETH Art. no.: 2420066			

Accessories optoNCDT ILR2250-100 / ILR2250-100-H / ILR2250-100-IO

Connection	Interface modules	Connection cables	Sensor	Accessories
Supply/PLC Power supply unit PS2031 Art. no.: 2420096		Supply and output cable Art. no.: 2901524 (3 m) 2901239 (3 m, 90°) 2901573 (5 m) 2901240 (5 m, 90°) 2901236 (10 m) 2901241 (10 m, 90°) 2901237 (20 m) 2901242 (20 m, 90°) 2901238 (30 m) 2901243 (30 m, 90°)	ILR2250-100 ILR2250-100-H	Reflector 210 x 297 mm Art. no.: 7966058
PLC Ethernet	IF2030 for PROFINET Art. no.: 2420087 IF2030 for EtherNet/IP Art. no.: 2420088			Air purge collar Art. no.: 7966062
Digital output/Ethernet	IF2001/USB Art. no.: 2213025			Protective glass Art. no.: 7966061
	IC2001/USB Art. no.: 2213041			
	IF1032/ETH Art. no.: 2420066			Filter glass Art. no.: 7966063 ILR-NDF 0.75 7966066 ILR-NDF 0.5 7966068 ILR-NDF 0.9
	IF2004/USB Art. no.: 2213024	Art. no.: 29011342 (3 m) 29011347 (5 m) 29011348 (10 m) 29011372 (20 m) 2x 2901528 (0.3 m)		
PLC Ethernet	IF2008/ETH for 8 sensors Art. no.: 2213030	Art. no.: 29011107 (5 m) 29011398 (3 m)		
	IO-Link master Power Digital I/O	IO-Link standard cable Art. no.: 29011362 (5 m) 29011363 (10 m) 29011364 (15 m)	ILR2250-100-IO Sensor + adapter cable (0.3 m) IO-Link inside	

Accessories
optoNCDT ILR

Accessories optoNCDT ILR1191-300

Connection	Interface modules	Connection cables	Assembly	Accessories
Supply/PLC Power supply unit PS2031 Art. no.: 2420096 		Supply and output cable Art. no.: 2901524 (3 m) 2901239 (3 m, 90°) 2901573 (5 m) 2901240 (5 m, 90°) 2901236 (10 m) 2901241 (10 m, 90°) 2901237 (20 m) 2901242 (20 m, 90°) 2901238 (30 m) 2901243 (30 m, 90°) 	Electrical connections 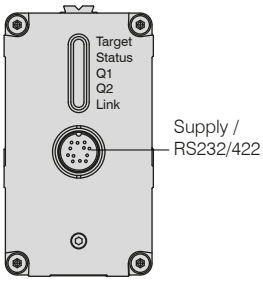	Reflector 250 x 250 mm Art. no.: 7966001
Digital output/Ethernet 	IF2001/USB Art. no.: 2213025 			Mounting plate Art. no.: 7966014
	IF1032/ETH Art. no.: 2420066 			Protection tube Art. no.: 7966016
				Alignment aid Art. no.: 7966060

Sensors and Systems from Micro-Epsilon

Sensors and systems for displacement, position and dimension

Sensors and measurement devices for non-contact temperature measurement

Measuring and inspection systems for quality assurance

Optical micrometers, fiber optics, measuring and test amplifiers

Color recognition sensors, LED Analyzers and inline color spectrometers

3D measurement technology for dimensional testing and surface inspection

Modifications reserved / Y9761278-D022033SVA

MICRO-EPSILON

MICRO-EPSILON Eltrotec GmbH
Manfred-Wörner-Straße 101 · 73037 Göppingen / Germany
Tel. +49 (0)7161 98872-300 · Fax+49 (0)7161 98872-303
eltrotec@micro-epsilon.de · **www.micro-epsilon.com**